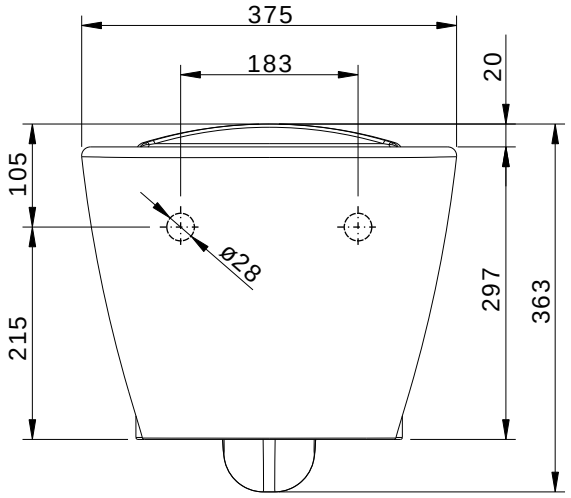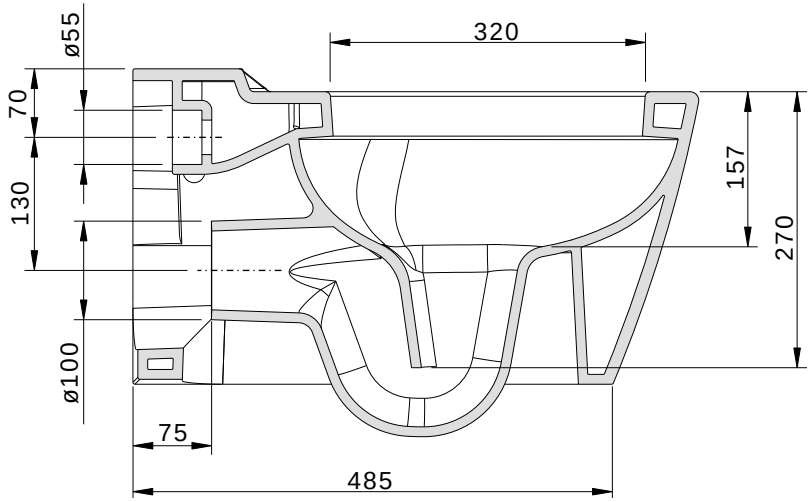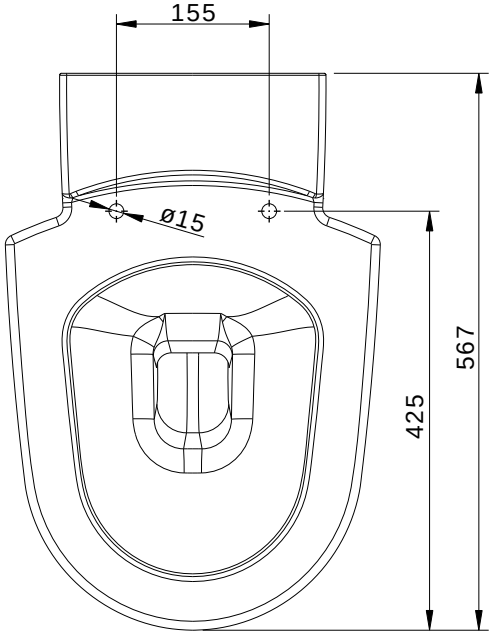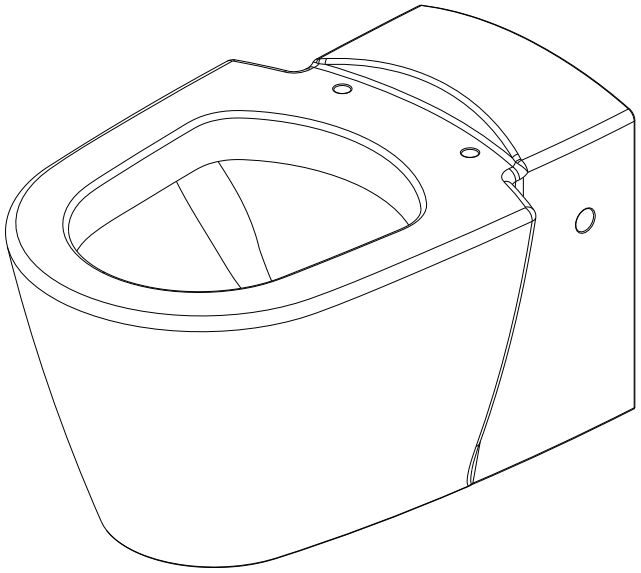WC suspendu EDEN, ref. 115457