www.nivault.com/WC-suspendu
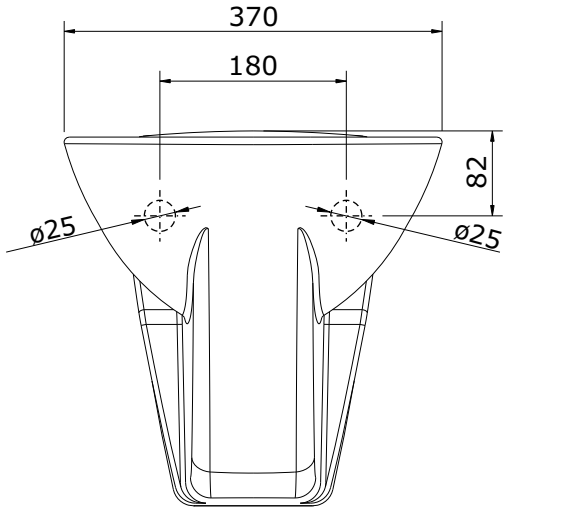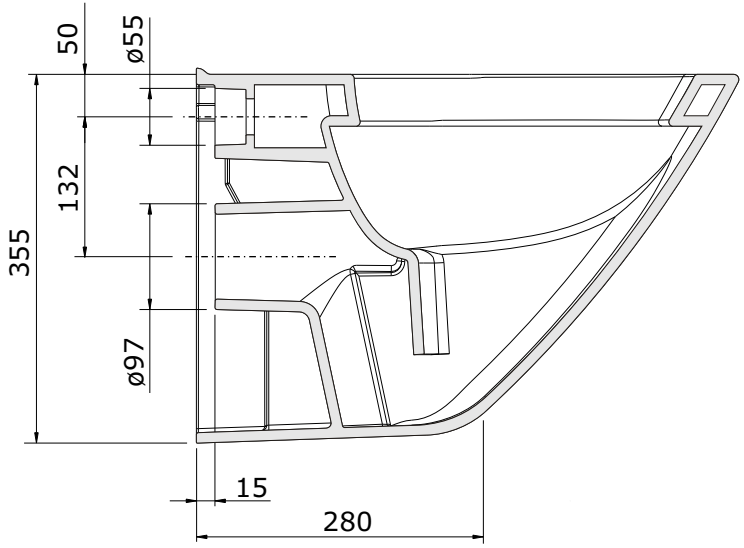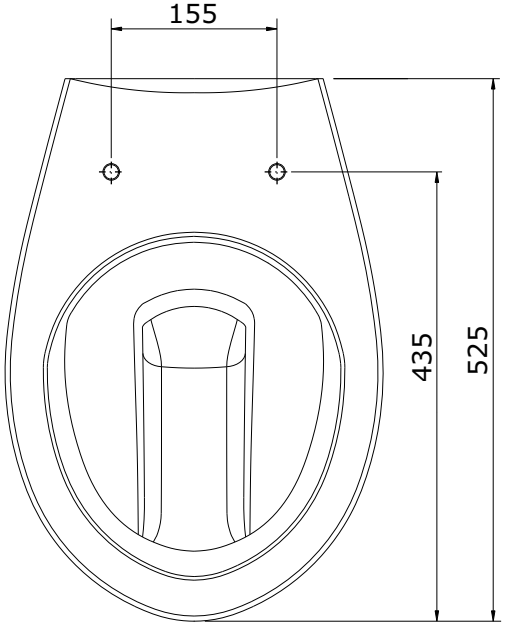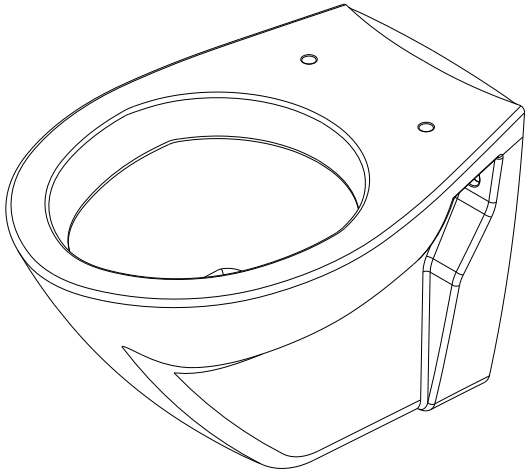
# WC Suspendu CETUS